R1AA13300FXH00M (R1AA13300FCH00M)

SANYO DENKI
SANMOTION

Dimensions (Unit:mm)

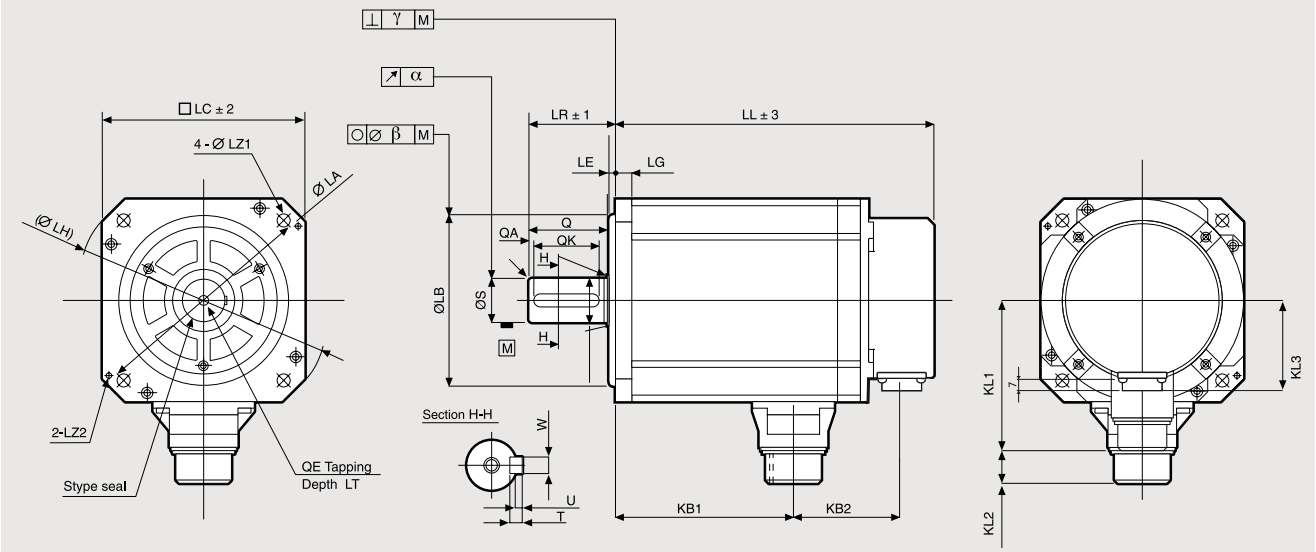

without brake LL	without brake KB2	with brake LL	with brake KB2	KL1	KL2	KL3	LG	LA	LB	LE	LH	LC	LZ1	LZ2	LR	S	Q	QA	QK	W	T	U	KB1	QE	LT
184	57	230	103	98	21	78	12	145	0 110-0.035	4	165	130	9	M6	55	0 28-0.013	50	3	42	0 8-0.036	7	3	112	M8	25

FEATURES

MODEL		R1AA13300FXH00M
NOMINAL POWER	(W)	3000
NOMINAL SPEED	(rpm)	3000
MAXIMUM SPEED	(rpm)	6000
NOMINAL TORQUE	(Nm)	9.7
STALL TORQUE	(Nm)	9.7
MAXIMUM TORQUE	(Nm)	29
INERTIA	(Kg*m²)	7×10^{-4}
ENCODER	(imp./rev)	131072 (17BIT)
PROTECTION DEGREE		IP65
WEIGHT [version with brake]	(Kg)	9.7 [11.8]

TORQUE CURVE
R1AA13300F [3kW] + RS3A10

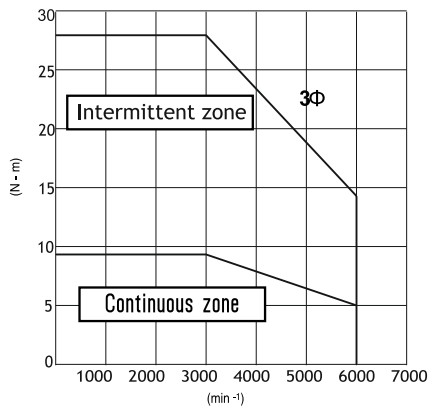

WITHOUT BRAKE
R1AA13300FXH00M

Indicated performances refer to motor controlled by related new RS3 standard and EtherCat amplifiers.

3Φ = torque curve with three-phase power supply

WITH BRAKE
R1AA13300FC00M

Suggested amplifiers: RS3A10A0AA2, RS3A10A2HA4W00P

R.T.A. s.r.l.
Via E. Mattei - Fraz- Divisa
27020 Marcignago (PV) (Italy)
T +39.0382.929.855
F +39.0382.929.150
www.rta.it

R.T.A. Deutschland GmbH
Bublitzer Strasse 34, 40599
Duesseldorf (Germany)
T +49.211.749.668.60
F +49.211.749.668.66
www.rta-deutschland.de

R.T.A. IBERICA
C/Generalitat 22, Local 1
08850 Gava - Barcelona (Spain)
T +34 936.388.805
F +34 936.334.595
www.rta-iberica.es

R.T.A. INDIA Pvt
Teerth Business Center 3rd Floor, Unit No. 7,
Block EL-15, MIDC Bhosari Pimpi-Chinchwd,
Pune 411026 (India)
Tel. +91 9422507445
www.rta-india.in

R.T.A. s.r.l. PAVIA (ITALY) SANYO DENKI CO.,Ltd (JAPAN)